Vivez l'expérience
MAAX®
Enjoy the experience

MAAX SUBMITTAL SPECIFICATIONS

TSEA Plus

MODEL NUMBER 105674

DIMENSIONS: 60" x 32" x 78" Fiberglass

Project : .....

Contractor : .....

MAAX Representative : ..... Tel : .....

Date : .....

STANDARD FEATURES

- 1-piece tub shower without roof cap
- Integrated wide shelves
- 20 in. apron, 13 3/8 in. deep bathing well
- Above-the-Floor Rough (AFR)
- Optional wall reinforcement and grab bars
- Standard acrylic handle

OPTIONS

- Left wall reinforcement only
- Right wall reinforcement only
- Back wall reinforcement only
- One chromatherapy light
- Metal trim kit for whirlpool and combined systems
- Cable-operated waste and overflow

UNIQUE FEATURES

- Above-the-Floor Rough (AFR)

SYSTEMS

MAAX Professional Whirlpool

Chromatherapy

DOOR SELECTION

Combine with MAAX's complete shower door offering visit www.maax.com

CERTIFICATIONS

Maax products adhere to one or more of the following certifications:

www.maax.com

2017-06-07

Vivez l'expérience
MAAX®
Enjoy the experience

MAAX SUBMITTAL SPECIFICATIONS

TSEA Plus

MODEL NUMBER 105674

TECHNICAL DRAWINGS

STANDARD

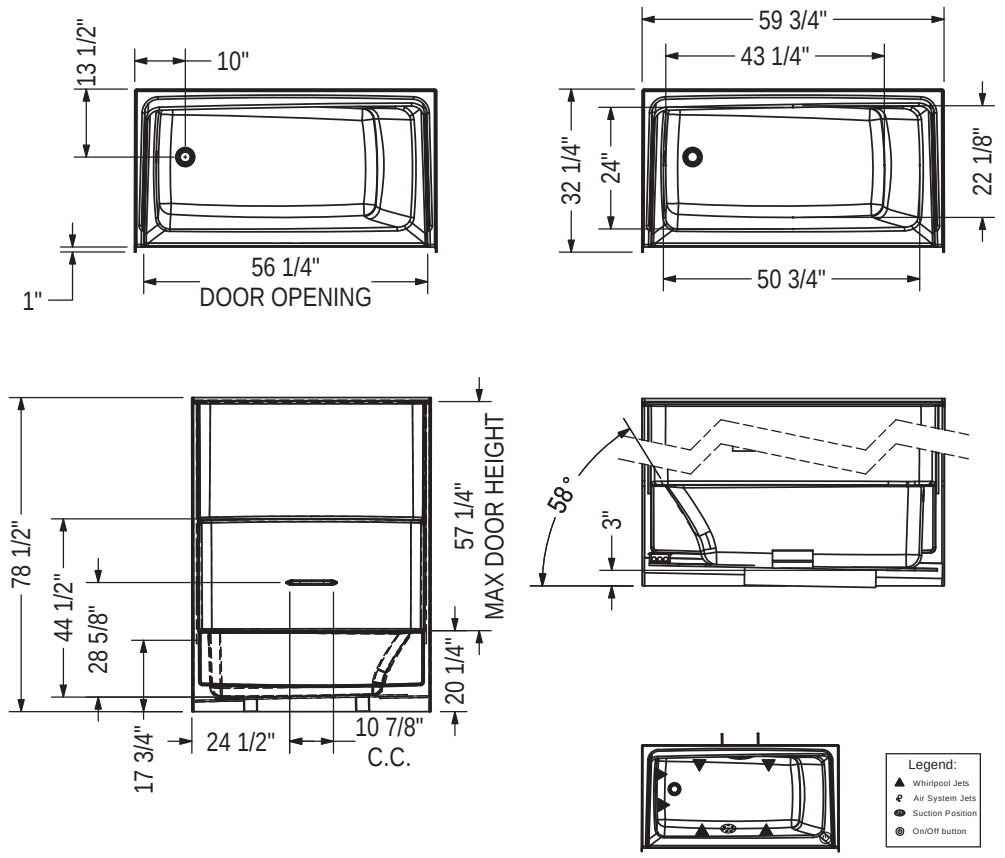

OPTIONAL REINFORCEMENT

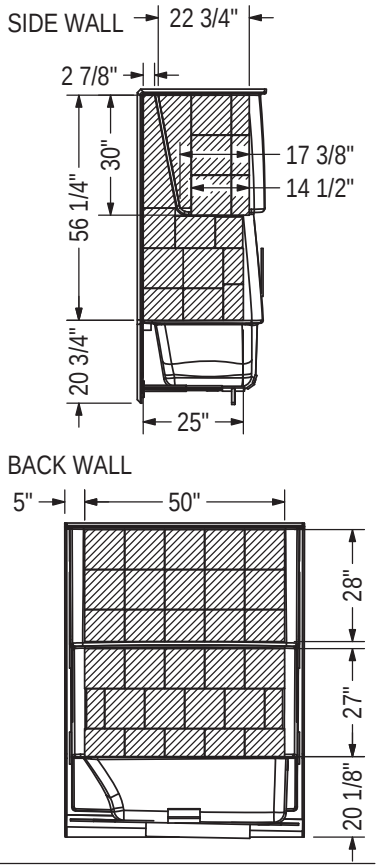

GRAB BARS

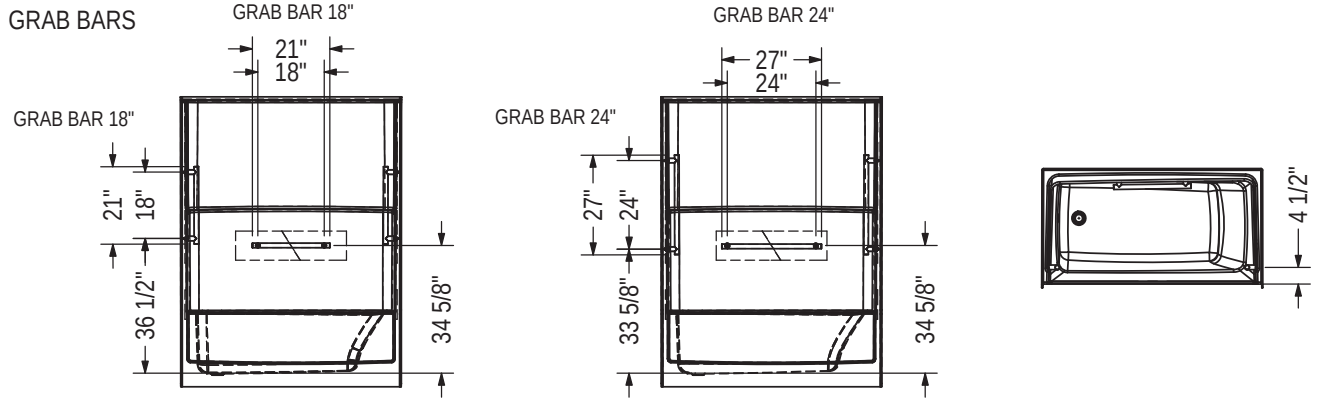

All dimensions are approximate. Structure measurements must be verified against the unit to ensure proper fit.

2017-06-07